DATA SHEET

Three Phase Induction Motor - Squirrel Cage

Customer :

Product line	: W21 Explosion Proof NEMA Premium Efficiency Three-Phase	Product code :	13748095
		Catalog # :	HX350504NPBB449TTAC

Frame	: 449T	Locked rotor time	: 25s (cold) 14s (hot)
Output	: 350 HP (260 kW)	Temperature rise	: 80 K
Poles	: 4	Duty cycle	: Cont.(S1)
Frequency	: 60 Hz	Ambient temperature	: -20°C to +40°C
Rated voltage	: 575 V	Altitude	: 1000 m.a.s.l.
Rated current	: 323 A	Protection degree	: IP55
L. R. Amperes	: 2650 A	Cooling method	: IC411 - TEFC
LRC	: 8.2x(Code J)	Mounting	: F-1
No load current	: 122 A	Rotation¹	: Both (CW and CCW)
Rated speed	: 1785 rpm	Noise level²	: 80.0 dB(A)
Slip	: 0.83 %	Starting method	: Direct On Line
Rated torque	: 1030 ft.lb	Approx. weight³	: 3289 lb
Locked rotor torque	: 280 %		
Breakdown torque	: 290 %		
Insulation class	: F		
Service factor	: 1.15		
Moment of inertia (J)	: 118 sq.ft.lb		
Design	: A		

Output	50%	75%	100%
Efficiency (%)	95.4	95.8	96.2
Power Factor	0.70	0.80	0.84

Foundation loads	
Max. traction	: 6316 lb
Max. compression	: 9605 lb

		Drive end	Non drive end
Bearing type	:	6322 C3	6319 C3
Sealing	:	00068	
Lubrication interval	:	5138 h	7038 h
Lubricant amount	:	60 g	45 g
Lubricant type	:	Mobil Polyrex EM	

Notes

This revision replaces and cancel the previous one, which must be eliminated.
(1) Looking the motor from the shaft end.
(2) Measured at 1m and with tolerance of +3dB(A).
(3) Approximate weight subject to changes after manufacturing process.
(4) At 100% of full load.

These are average values based on tests with sinusoidal power supply, subject to the tolerances stipulated in NEMA MG-1.

Rev.	Changes Summary	Performed	Checked	Date

Performed by				
Checked by			Page	Revision
Date	09/07/2025		1 / 7	

This document is exclusive property of WEG S/A. Reprinting is not allowed without written authorization of WEG S/A.
Subject to change without notice

Thermal protection

ID	Application	Type	Quantity	Sensing Temperature
1	Winding	Thermostat - 2 wires	1 x Phase	155 ºC

This document is exclusive property of WEG S/A. Reprinting is not allowed without written authorization of WEG S/A.
Subject to change without notice

TORQUE AND CURRENT VS SPEED CURVE

Three Phase Induction Motor - Squirrel Cage

Customer	:		
Product line	: W21 Explosion Proof NEMA Premium Efficiency Three-Phase	Product code :	13748095
		Catalog # :	HX350504NPBB449TTAC

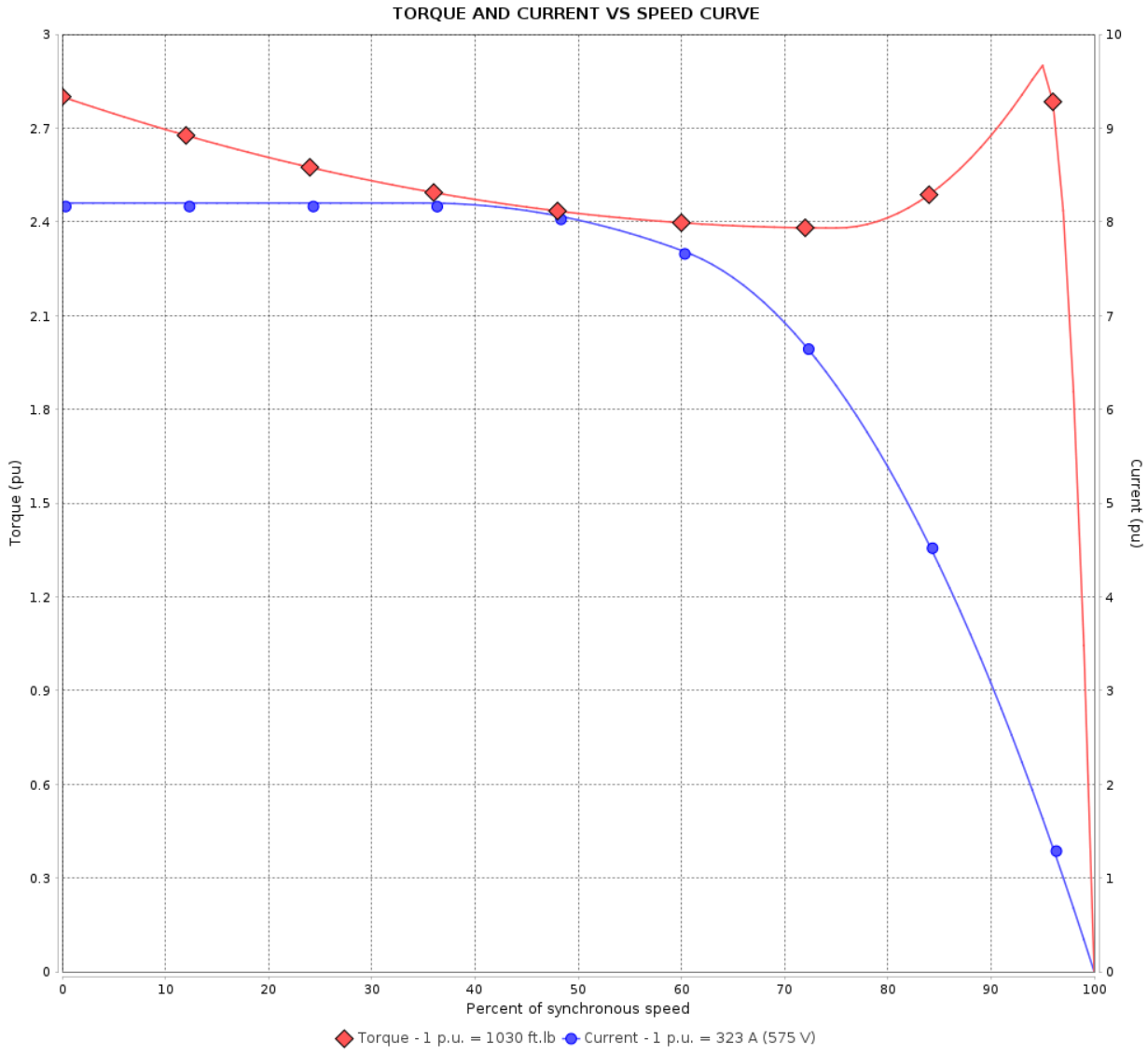

Performance	: 575 V 60 Hz 4P		
Rated current	: 323 A	Moment of inertia (J)	: 118 sq.ft.lb
LRC	: 8.2	Duty cycle	: Cont.(S1)
Rated torque	: 1030 ft.lb	Insulation class	: F
Locked rotor torque	: 280 %	Service factor	: 1.15
Breakdown torque	: 290 %	Temperature rise	: 80 K
Rated speed	: 1785 rpm	Design	: A
Locked rotor time	: 25s (cold) 14s (hot)		

Rev.	Changes Summary	Performed	Checked	Date

Performed by				
Checked by			Page	Revision
Date	09/07/2025		3 / 7	

This document is exclusive property of WEG S/A. Reprinting is not allowed without written authorization of WEG S/A.
Subject to change without notice

LOAD PERFORMANCE CURVE

Three Phase Induction Motor - Squirrel Cage

Customer :

Product line	: W21 Explosion Proof NEMA Premium Efficiency Three-Phase	Product code :	13748095
		Catalog # :	HX350504NPBB449TTAC

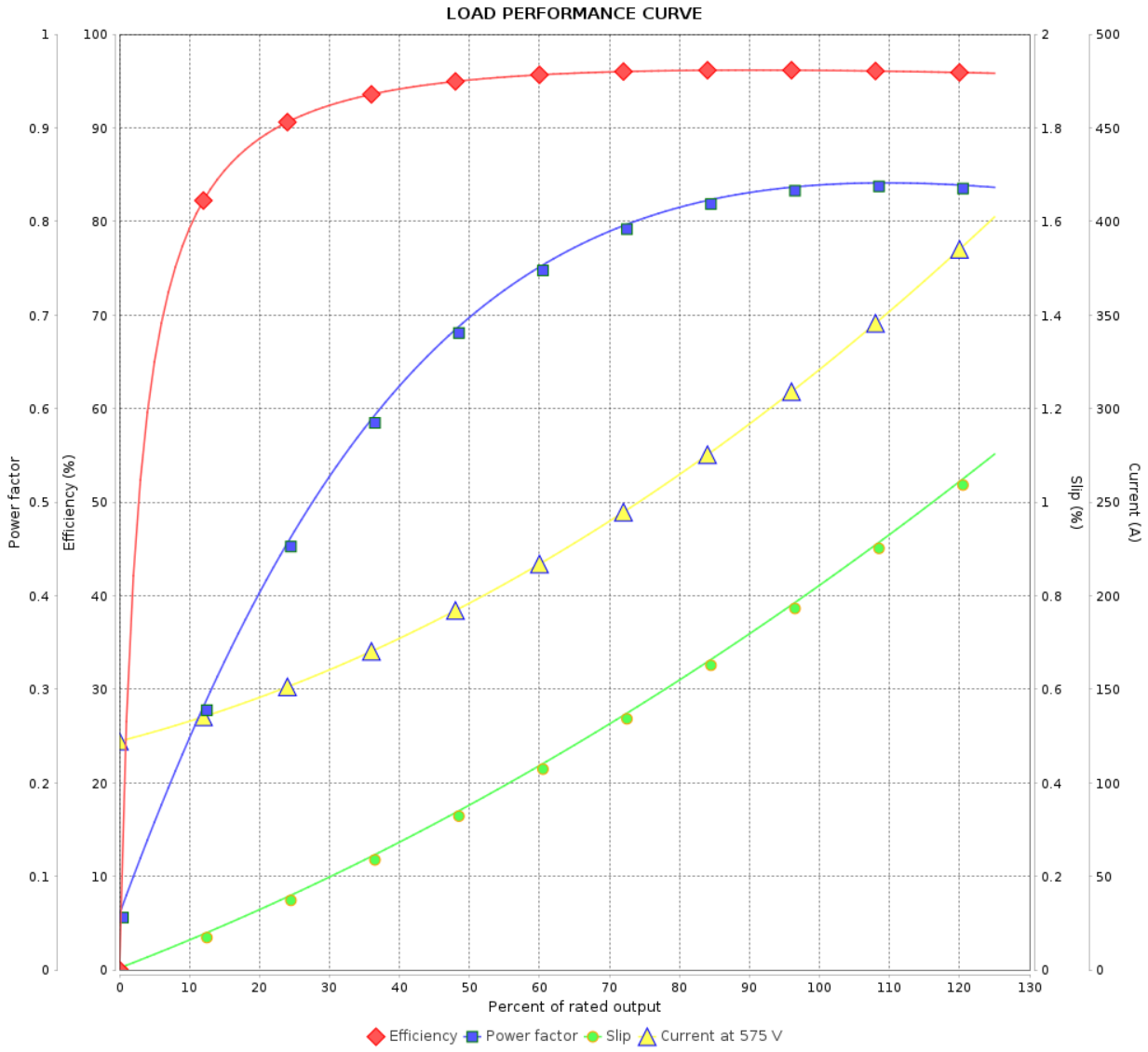

Performance	: 575 V 60 Hz 4P		
Rated current	: 323 A	Moment of inertia (J)	: 118 sq.ft.lb
LRC	: 8.2	Duty cycle	: Cont.(S1)
Rated torque	: 1030 ft.lb	Insulation class	: F
Locked rotor torque	: 280 %	Service factor	: 1.15
Breakdown torque	: 290 %	Temperature rise	: 80 K
Rated speed	: 1785 rpm	Design	: A

Rev.	Changes Summary	Performed	Checked	Date

Performed by				
Checked by			Page	Revision
Date	09/07/2025		4 / 7	

This document is exclusive property of WEG S/A. Reprinting is not allowed without written authorization of WEG S/A.
Subject to change without notice

THERMAL LIMIT CURVE

Three Phase Induction Motor - Squirrel Cage

Customer :

Product line	: W21 Explosion Proof NEMA Premium Efficiency Three-Phase	Product code :	13748095
		Catalog # :	HX350504NPBB449TTAC

Performance : 575 V 60 Hz 4P

Rated current	: 323 A	Moment of inertia (J)	: 118 sq.ft.lb
LRC	: 8.2	Duty cycle	: Cont.(S1)
Rated torque	: 1030 ft.lb	Insulation class	: F
Locked rotor torque	: 280 %	Service factor	: 1.15
Breakdown torque	: 290 %	Temperature rise	: 80 K
Rated speed	: 1785 rpm	Design	: A

Heating constant

Cooling constant

Rev.	Changes Summary	Performed	Checked	Date

Performed by				
Checked by			Page	Revision
Date	09/07/2025		5 / 7	

This document is exclusive property of WEG S/A. Reprinting is not allowed without written authorization of WEG S/A.
Subject to change without notice

THERMAL LIMIT CURVE

Three Phase Induction Motor - Squirrel Cage

Customer :

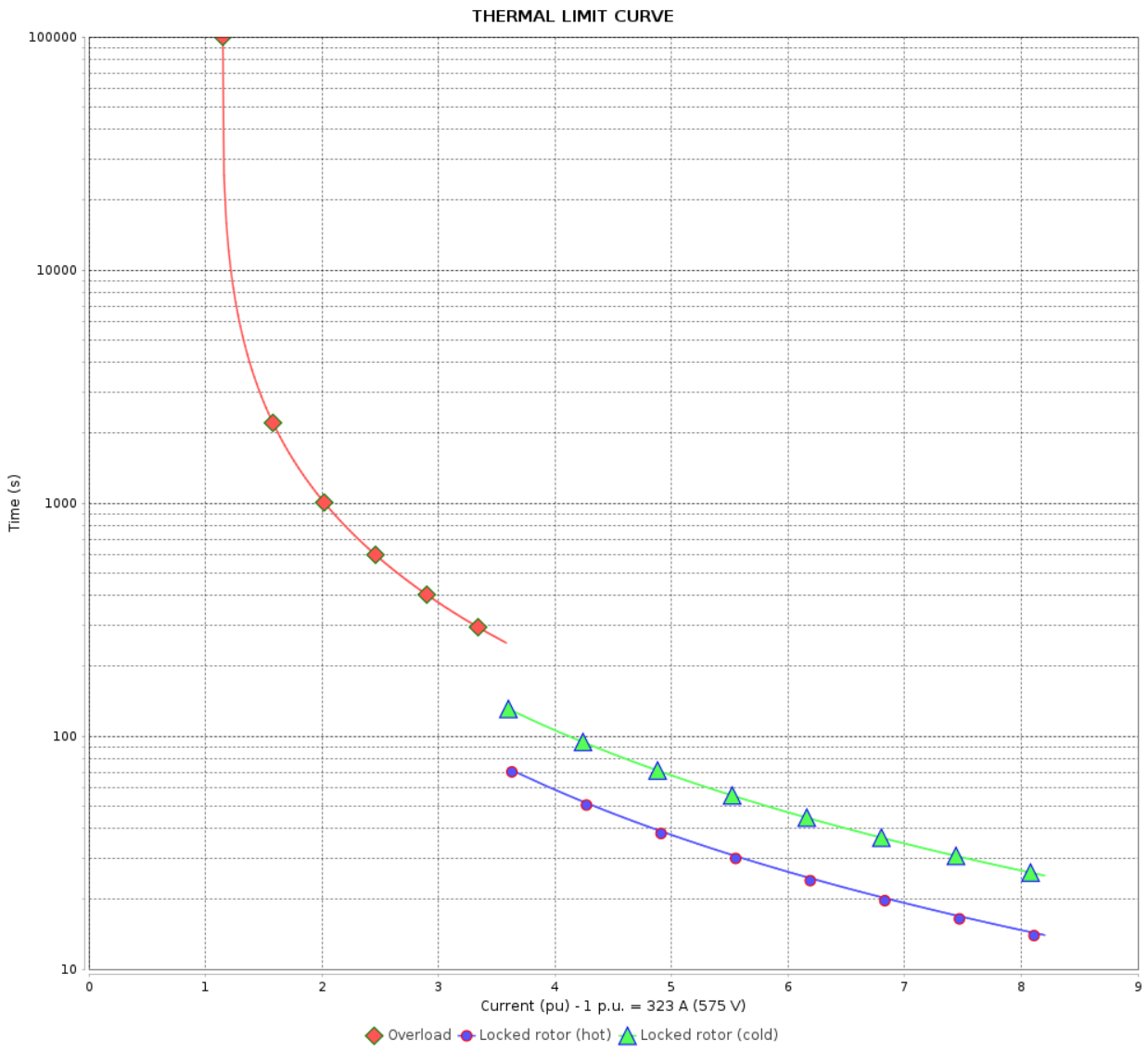

Rev.	Changes Summary	Performed	Checked	Date

Performed by				
Checked by			Page	Revision
Date	09/07/2025		6 / 7	

This document is exclusive property of WEG S/A. Reprinting is not allowed without written authorization of WEG S/A.
Subject to change without notice

VFD OPERATION CURVE

Three Phase Induction Motor - Squirrel Cage

Customer :

Product line	: W21 Explosion Proof NEMA Premium Efficiency Three-Phase	Product code :	13748095
		Catalog # :	HX350504NPBB449TTAC

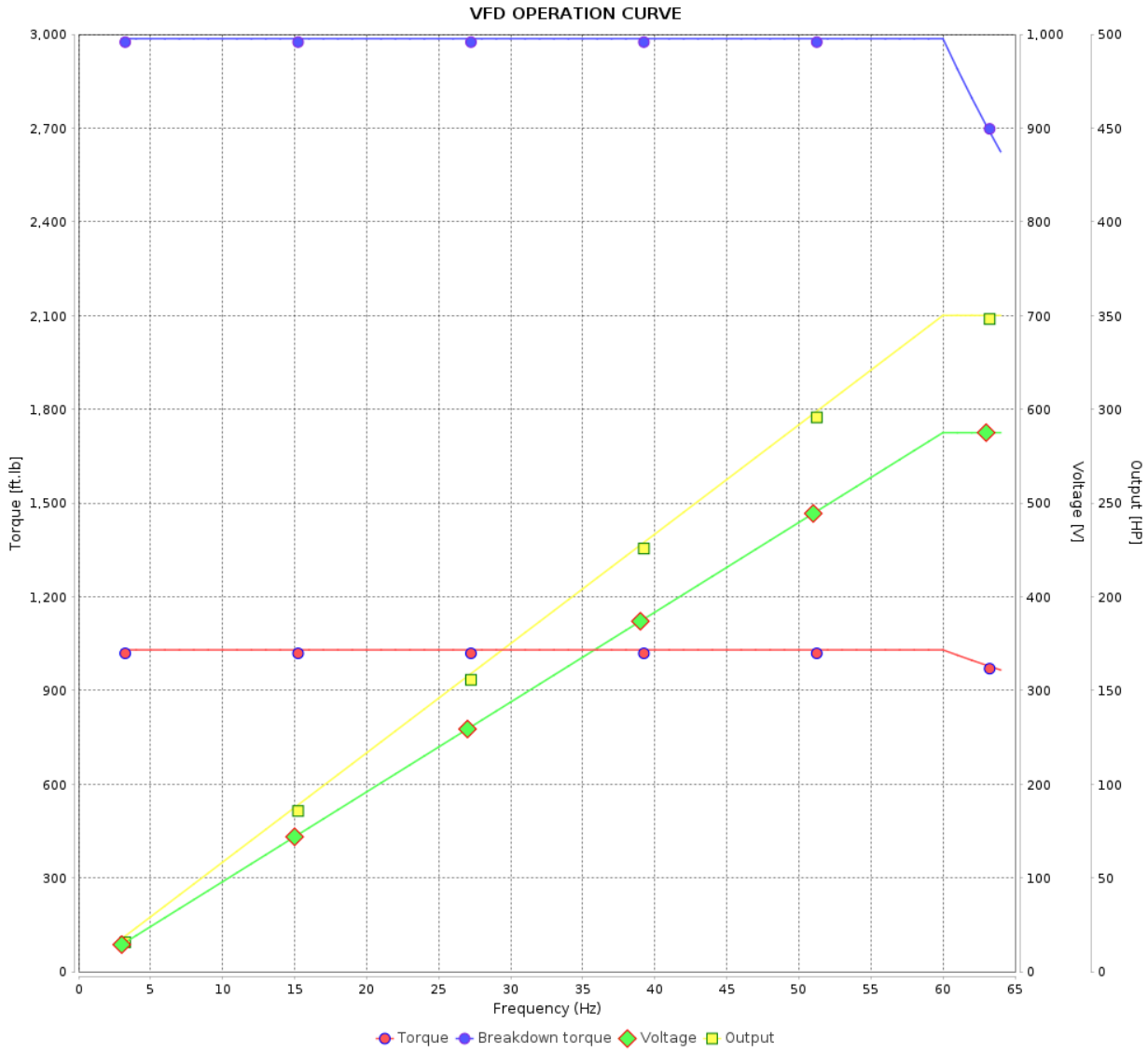

Performance	: 575 V 60 Hz 4P

Rated current	: 323 A	Moment of inertia (J)	: 118 sq.ft.lb
LRC	: 8.2	Duty cycle	: Cont.(S1)
Rated torque	: 1030 ft.lb	Insulation class	: F
Locked rotor torque	: 280 %	Service factor	: 1.15
Breakdown torque	: 290 %	Temperature rise	: 80 K
Rated speed	: 1785 rpm	Design	: A

Rev.	Changes Summary	Performed	Checked	Date

Performed by				
Checked by			Page	Revision
Date	09/07/2025		7 / 7	

This document is exclusive property of WEG S/A. Reprinting is not allowed without written authorization of WEG S/A.
Subject to change without notice

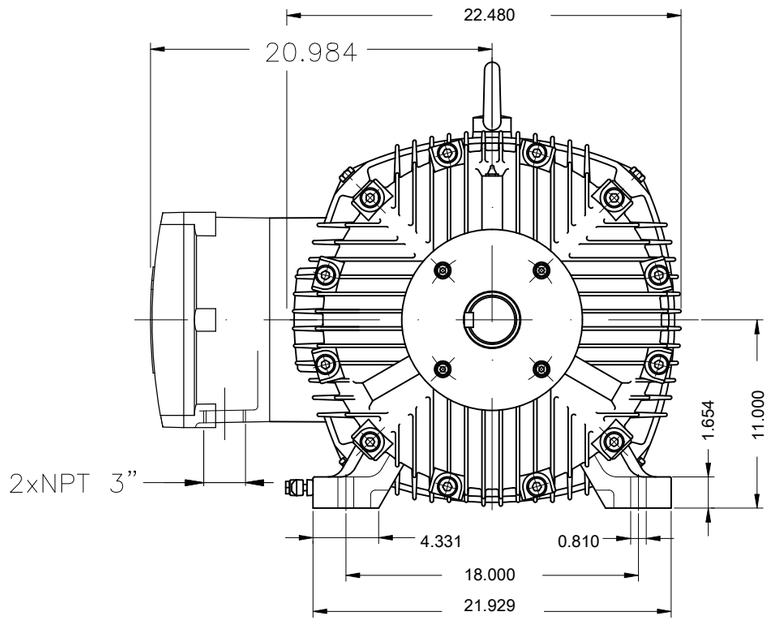

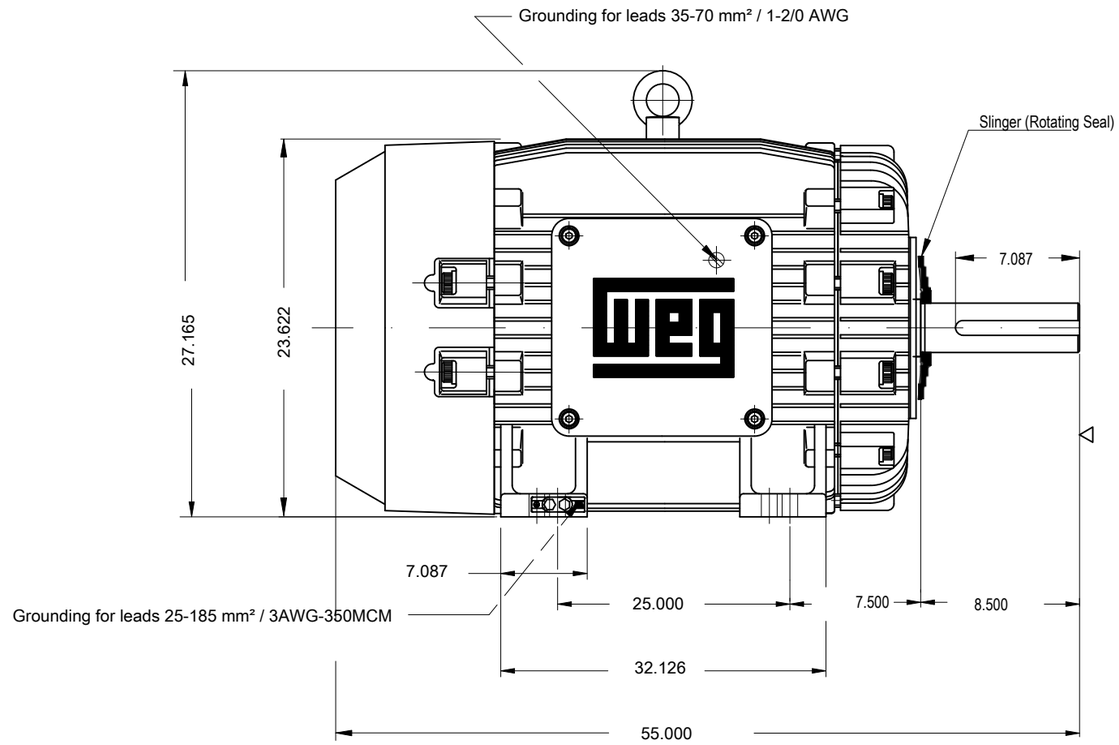

DE Shaft End

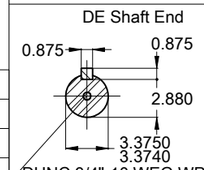

DUNC 3/4"-10 WEG WPR-7339

Color RAL 5009

Painting plan 222P

Mounting NEMA F-1

Mounting B3R(D)

350 HP 04 Poles 60 Hz | A

ECM	LOC	SUMMARY OF MODIFICATIONS	EXECUTED	CHECKED	RELEASED	DATE	VER
			HYBRISUSER				00

EXECUTED	HYBRISUSER	THREE PH. MOTOR EXPLOSION PROOF NEMA PREM. EFF.
CHECKED		FRAME 449T IP55 TEFC
RELEASED		
REL. DATE		WMO Jaragua do Sul Product Engineering

PREVIEW

WDD 00

SHEET 1 / 1

Dimensions in inches

XME A3

WEG's property. Forbidden reproduction without previous authorization.